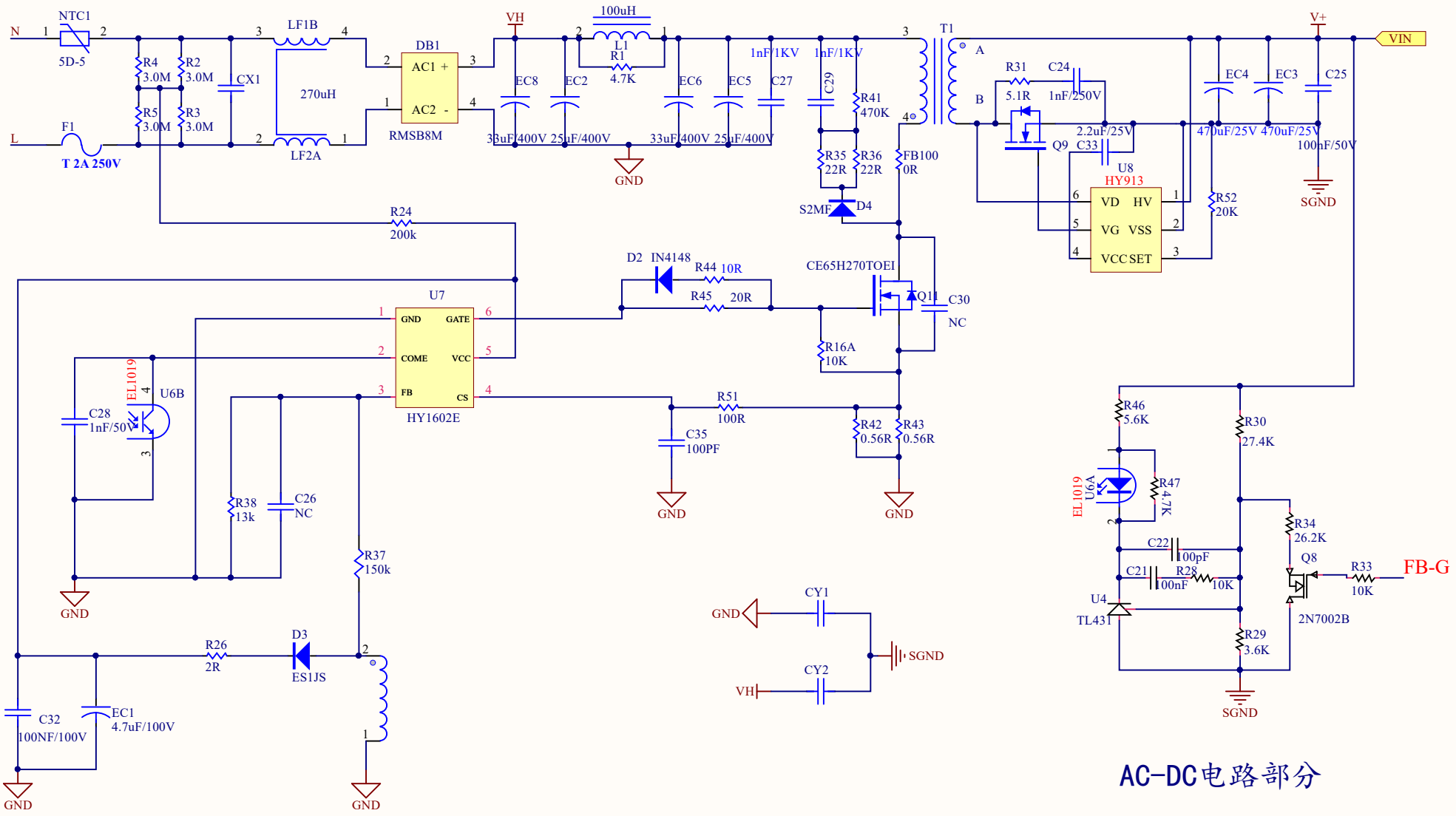

AC-DC电路部分

Title		
Size A4	Number	Revision
Date: 2023/3/11	Sheet of	
File: D:\MXH\..\65W2C1A_20230308.SchDoc	Drawn By:	